Dynamic Simulation of Closed Brayton Cycle Solar Thermal Power System

Yuting WU[1] Jianxun REN[2] Zengyuan GUO[2] Chongfang MA[1]

([1]Key Lab of Education Ministry of Heat Transfer Enhancement and energy conservation, College of environmental and energy , Beijing University of Technology, Beijing 100084,PR. China)

([2]Department of Engineering Mechanics, Tsinghua University, , Beijing 100084)

ABSTRACT： The work process of Closed Brayton Cycle Solar Thermal Power System is a dynamic process and the periodical change of eclipse and sun period will influence the system performance. In order to study the dynamic characteristic of the system, a dynamic model is proposed using lumped method and the dynamic simulations of space solar-dynamic power system with the electrical output power of 10 kW are performed. The simulation results indicated that the variations of temperature of phase change material and electrical output power with time are very small when the phase change materials are in the state of two phase, but the variations are bigger when the Phase-change materials are in the state of single phase. In order to gain a steady electrical output power, phase change material must be in the state of two-phase by choosing proper parameters of solar thermal power system.

Keywords: solar energy, dynamic power system, space station, dynamic simulation

NOMENCLATURE

B coefficient of consuming gas for cooling generator and axis

C_p Specific heat at constant pressure[$J.kg^{-1}.K^{-1}$]

$c_{p,pcm}$ Specific heat of phase change material at constant pressure，$J.kg^{-1}.K^{-1}$

$d_{RC,i}$ inner diameter of heat transfer tube, m

$d_{RC,o}$ out diameter of heat transfer tube, m

F_{SC} Concentrator area，m^2

F_{RP} heat transfer area of recuperator, m^2

G_i mass flow rate of working fluid in single heat transfer tube，kg/s

G mass flow rate of working fluid, kg/s

h_i Convection heat transfer coefficient of working fluid in the heat transfer tube，$W \cdot m^{-2} \cdot K^{-1}$

k adiabatic index

K_{RP} Heat transfer coefficient of recuperator，$W.m^{-2}.K^{-1}$

L_{RC} length of heat transfer tube, m

m_{pcm} mass of phase change material，kg

m_i mass of working fluid through node i within the time of dt，kg

m_{f2i} mass of working fluid through heat pipe i within the time of dt，kg

N_a Output power, W

q_I heat loss of receiver, W

q_g heat flux from phase change material to working fluid，W

q_{sun} heat flux from concentrator received by receiver，W

r_{pcm} melting latent heat of phase change material, J/kg

$\sum_{i=1}^{8} R_i$ overall heat resistance of condenser of heat pipe, $m^2.K.W^{-1}$

S solar constant, W/m^2

T_c temperature of phase change material, K

T_i temperature of node i，K

T_{f1i} temperature of working fluid before heat pipe i, K

T_{f2i} temperature of working fluid after heat pipe i, K

T_{wi} wall temperature of heat pipe condenser，K

T_s space heat sink, K

W_{pcm} liquid fraction of phase change material

Ω coefficient of available area

η_{SC} efficiency of concentrator

η_a efficiency of generator

η_{pl} efficiency of self consumption

η_M mechanical efficiency

λ_w heat conductivity of wall，$W.m^{-1}.K^{-1}$

λ_l heat conductivity of liquid phase change material, $W \cdot m^{-1} \cdot K^{-1}$

Received date：2004－05－16

Corresponding author：WU Yuting **E-mail**：wuyuting@bjut.edu.cn

$\gamma(i)$ diameter of solid phase change material，m

ρ_{pcm} density of phase change material, kg • m^{-3}

π_c Compression Ratio

π_t Blow Up Ratio

1. INTRODUCTION

In 2000 the world population reached 6 billion people, and the latest forecasts expect that this figure will rise to approximately 10 billion at the end of this century. These 10 billion people will most likely have a higher standard of living than today's average, with assumptions ranging from 2 to 5 fold improvement. Since the standard of living is closely linked to the energy consumption, a simple calculation shows the dramatic challenges facing the worldwide energy sector in the coming 100 years: Approximately twice the population at a doubled standard of living will need approximately four times the electricity than today's power park in the world can supply. Even if there would be sufficient fossil resources to cover the growing demand, a point would soon be reached where the CO2 emissions are too high and would severely and irreversibly damage our ecosystem. The limited supply of fossil hydrocarbon resources and the negative impact of CO2 emission on the global environment dictate the increasing usage of renewable energy sources. Presently, only hydro and wind power plants at good sites can generate electricity in an acceptable cost range. The potentials of hydro and wind power, on the other hand, are limited. However, solar electricity generation is a nearly unlimited source. Photovoltaic is one promising technology. But the direct solar electricity generation will need at least two or three decades to bring the prices in a competitive range. On the other hand, prices for solar thermal power generation are only slightly above those of hydro or wind power. Concentrated solar thermal power is the most likely candidate for providing the majority of this renewable energy, because it is amongst the most cost effective renewable electricity technologies and because its supply is not restricted if transported from the World's solar belt to the population centers.

Solar thermal electric technologies convert sunlight into electricity efficiently and with minimum effect on the environment. These technologies generate high temperatures by using mirrors to concentrate the sun's energy up to 5000 times its normal intensity. This heat is then used to generate electricity for a variety of market applications, ranging from remote power needs as small as a few kilowatts up to grid-connected applications of 200 MW or more. STE can begin providing energy, as well as economic and environmental security, for us today. In the long term, these technologies will compete broadly in international markets for electric power production. Solar thermal electricity is the least costly solar electricity for grid-connected applications available today, and it has the potential for further, significant cost reductions.

With 354 MW of solar electric generating systems (SEGS) parabolic trough power plants connected to the grid in Southern California since the mid-1980s, parabolic troughs represent the most mature solar thermal power technology. To date, there are more than 100 plant-years of experience from the nine operating plants, which range in size from 14 MW to 80 MW. All nine SEGS units continue generating electricity until today, demonstrating the reliability of this technology. Up to now, 9 TWh of solar electrical energy has been fed into the Californian grid, resulting in sales revenues of over 1,000 million US-dollars. Levelized electricity costs of about 12 to 14 US-cents/kWh have been reached with the last erected solar power plants [1]. For the background of the actual energy crises upcoming in the year 2000 in California the SEGS plants are some of the most cost-effective power stations in the state and are more competitive than ever before. Since the introduction of the power exchange market in California the electricity prices exploded dramatically; during some peak hours over 100 US-cents had to be paid for one kWh electricity. In the medium term, a 50 % cost reduction of the solar field can be achieved by economies of scale, technical advancements, series production, increased competition and other learning effects. Thus, competitive solar thermal electricity costs will be achieved within a decade, if a continuous, world wide expansion of the solar thermal power market takes place.

The U.S. Department of Energy have made a plan to Develop Solar Thermal Electric Technology Over the Next Twenty Years: 1996 – 2015. Their Vision for success is world leadership by U.S. industry in supplying 20 GW of solar thermal electric power by 2020. The World Bank is now willing to support market introduction of solar thermal power in India, Egypt, Morocco and Mexico, by covering incremental costs over the least-cost conventional alternative up to an actual fund totaling to 200 million US-Dollar (about 50 million US-Dollar per project). On this background, various commercial power plant project developments in Greece, Egypt, India, Mexico, Marocco, Spain, Iran, the USA and Brazil with unit outputs of 50 to 310 MW and large solar fields of parabolic trough collectors are currently under way or are in a progressive planning stage by European and U.S. project developers supported by grants of the World Bank/GEF or other funds.

From a current level of just 354 MW, the total installed capacity of solar thermal power plants will have passed 5000 MW by 2015, according to the Greenpeace-ESTIA

projections. By 2020,additional capacity would be rising at a level of almost 4500 MW each year. by 2030, worldwide capacity will have reached 106,000 MW, and by 2040 a level of almost 630,000 MW will have been achieved. Increased availability of plant, because of the greater use of efficient storage technology, will also increase the amount of electricity generated from a given installed capacity. The result is that, by 2040, more than 5% of the world's electricity demand could be satisfied by solar thermal power[1].

There are three options utilized for a solar thermal power system: Brayton cycle, Rankine cycle and Stirling cycle. Because Brayton cycle is a mature technology and its efficiency is also higher than Rakine cycle, the solar Brayton cycle is considered as the most promising power generation system for near future application. The Brayton cycle has been applied extensively to terrestrial power systems[2].

The work process of Closed Brayton Cycle Solar Thermal Power System is a dynamic process and the periodical change of eclipse and sun period will influence the system performance. Steady simulation of the system hade been researched by many researcher[3,4,5,6,7,8,9], but research of the dynamic simulation of the system is seldom. In order to study the dynamic characteristic of the system, a dynamic model is proposed using lumped method and the dynamic simulations of Closed Brayton Cycle Solar Thermal Power System with the electrical output power of 10 kW are performed.

2. SYSTEM DESCRIPTION

Figure 1 is a schematic diagram of a closed Brayton cycle configuration. During insolation period, solar energy is collected by a rotating parabolic collector and incident on the surface of the gas sleeve tube of the receiver. A part of the input solar is used to heat the working gas to the design outlet temperature and the excess solar energy input is stored as heat of the fusion in the phase-change material. The exit gas of receiver expands through the turbine, thereby producing the mechanical work necessary to drive the compressor and alternator, then the gas enters the recuperator where it is cooled as it transfer heat to the gas from the compressor. Final cooling of the gas takes place in the radiator, where the excess heat is rejected to space. The gas leaving the radiator is then compressed and heated in the recuperator and further heated in the heat receiver. During the following eclipse period, the stored energy in phase-change material is withdrawn to heat the working gas for finishing the closed brayton cycle.

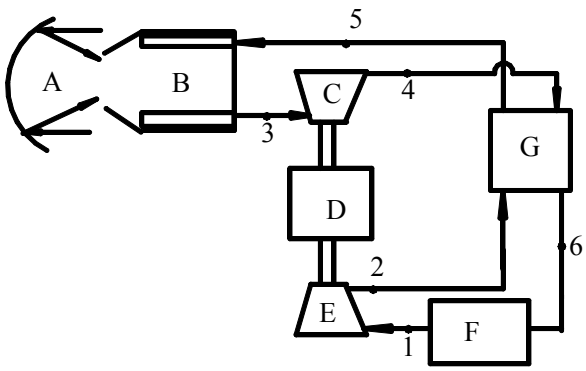

Fig.1 Schematic Diagram of system configuration

A Concentrator B Receiver C Turbine

D Alternator E Compressor F Radiator

G Recuperator

The major components of the system are solar concentrator, receiver with integrated thermal energy storage, energy conversion component, recuperator, radiator and control subsystem. For each different design, the dimensions and masses of these components are different also. The baseline configuration of this paper's example is described as follows:

(1) Solar concentrator — symmetric rotation-parabolic dish
(2) Receiver — cylinder cavity receiver with 80.5LiF-19.5CaF_2 phase-change material as the thermal energy storage salt.
(3) Energy conversion component — a single-stage centrifugal compressor, a single-stage radial turbine, and smooth-rotor alternator on the same shaft.
(4) Recuperator — counter flow, plate-fin heat exchanger.
(5) Radiator — heat pipe radiator with methanol as a heat transfer liquid.

The cycle working fluid is a mixture of helium(He) and xenon(Xe).

3. SYSTEM MODEL

3.1 Concentrator

The thermal energy collected by concentrator can be expressed as:

$$q_{sun} = \eta_{SC} \Omega S F_{SC} \qquad (1)$$

3.2 Receiver

The heat transfer and energy equation inside phase change thermal energy storage container can be expressed as:

$$m_{pcm} c_{p,pcm} \frac{dT_c}{d\tau} = q_{sun} - q_g - q_I \quad (W=0;1) \qquad (2)$$

$$m_{pcm} r_{pcm} \frac{dW_{pcm}}{d\tau} = q_{sun} - q_g - q_I \quad (0<W<1) \qquad (3)$$

Heat flux form phase change material to working fluid can be calculated by:

$$q_g = K_{RC} F_{RC} (T_c - T_3) \qquad (4)$$

Where, $K_{RC}F_{RC}$ can be expressed as follows:

$$K_{RC}F_{RC} = \frac{1}{\left(\frac{1}{h_i \pi d_{RC,i} L_{RC}} + \frac{1}{2\pi\lambda_w L_{RC}} \ln\frac{d_{RC,o}}{d_{RC,i}} + \frac{1}{2\pi\lambda_1 L_{RC}} \ln\frac{\gamma(i)}{d_{RC,o}}\right)} \quad (5)$$

Where

$$\gamma(i) = \sqrt{\frac{mW_{pcm}}{\rho_{pcm}\pi L_{RC}} + d_{RC,o}^{\ 2}} \quad (6)$$

The heat transfer and energy equation inside the tube of working fluid can be expressed as:

$$m_3 C_p \frac{dT_3}{d\tau} + G_i C_p (T_3 - T_5) = K_{RC} F_{RC} (T_c - T_3) \quad (7)$$

3.3 Energy conversion component

The energy balance equation can be expressed by:

$$N_a = GC_P[(T_3 - T_4) - (1+b)(T_2 - T_1)] \cdot \eta_a \eta_{pl} \eta_M \quad (8)$$

The outlet temperature of centrifugal compressor and radial turbine can be expressed respectively as follows:

$$T_2 = T_1\left(1 + \frac{\pi_c^{\frac{K-1}{K}} - 1}{\eta_c}\right) \quad (13)$$

$$T_4 = T_3[1 - (1 - \pi_t^{-\frac{K-1}{K}})\eta_t] \quad (14)$$

3.4 Recuperator

The heat transfer and energy equation of Recuperator can be expressed as:

$$m_6 C_p \frac{dT_6}{dt} + GC_p(T_6 - T_4) = K_{RP} F_{RP} \frac{(T_4 - T_5) - (T_6 - T_2)}{\ln\frac{T_4 - T_5}{T_6 - T_2}} \quad (15)$$

$$m_5 C_p \frac{dT_5}{dt} + GC_p(T_5 - T_2) = K_{RP} F_{RP} \frac{(T_4 - T_5) - (T_6 - T_2)}{\ln\frac{T_4 - T_5}{T_6 - T_2}} \quad (16)$$

3.5 Radiator

The heat transfer and energy equation of heat pipe can be expressed as:

$$m_{f2i} C_p \frac{dT_{f2i}}{d\tau} + GC_p(T_{f2i} - T_{f1i}) = \frac{T_{wi} - T_{f1i}}{\sum_{i=1}^{8} R_i} = \eta\varepsilon\sigma A_{rad}(T_s^4 - T_{wi}^4) \quad (17)$$

The variational laws of space temperature with time can be expressed as:

$$T_s = 210 + 30\sin(3.14t/3540) \quad t \in [0,3540] \quad (18)$$

$$T_s = 210 - 30\sin\left(\frac{3.14 \times (t - 3540)}{2160}\right) \quad t \in [3540,5700] \quad (19)$$

4. RESULTS AND DISCUSSION

4.1 Dynamic Characteristics of system parameters

Dynamic simulation results were shown from Figure 2 to Figure 4. It is seen from figure 2 that liquid fraction of phase change materials increased during sun period and decreased during eclipse period as times increased. The minimum of liquid fraction during eclipse period increased step by step in the first ten cycles and thereafter attained a stable value. In the first ten cycles, the stored thermal energy during sun period was bigger than the discharged thermal energy during eclipse , which cause the stepwise increases of the minimum of liquid fraction till the phase change material entirely change liquid. Thereafter the temperature of liquid phase change materials begin to increase, which cause the increase of heat flux from phase change material to working fluid and the decrease of stored thermal energy during sun period. The balance between stored thermal energy and released thermal energy was finally attained at the tenth cycle.

It is seen from Figure 4 that the temperature T_7 of phase change material firstly keep a stable value. Thereafter T_7 begin to increase when the phase change material change entirely liquid and then decreased to melting point during eclipse. The maximum of T_7 increased step by step in the first ten cycles and thereafter attained a stable value. The temperature T_5 , T_3 and T_4 change as the same laws as T_7, but the temperature T_6 , T_1 and T_2 have very little fluctuation as the fluctuation of T_7.

Figure 3 indicates that the output power keep a stable value in the first two cycles for the stable temperature T_7 and thereafter change periodically for the periodically changing temperature of T_7. The maximum of output power increased step by step in the first ten cycles and thereafter attained a stable value. The biggest fluctuation is about 4 kW.

4.2 Influence of concentrator area

The effect of concentrator area on dynamic behavior of system were shown from figure 5 to figure 6. At the point of F_{sc}=46.4m^2, Phase change material change entirely liquid during sun period after two cycles , which lead to the increase of the temperature of phase change material and the up fluctuation of output power. However, at the point of F_{sc}=41.8m^2, Phase change material change entirely solid during eclipse period after two cycles , which lead to the decrease of the temperature of phase change material and the down fluctuation of output

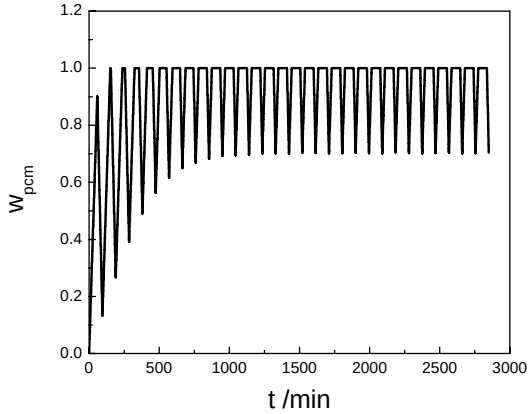

Fig. 2 Dynamic behavior of liquid fraction of Phase change material

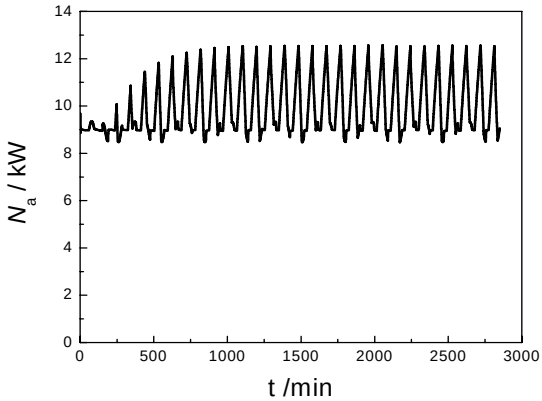

Fig. 3 Dynamic behavior of Power output

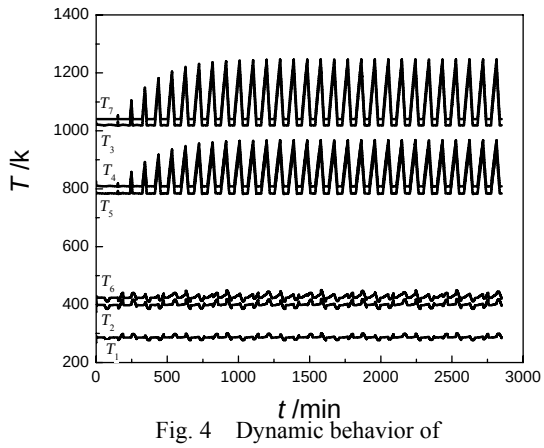

Fig. 4 Dynamic behavior of temperature at nodes

power. At the point of F_{sc}=44.1m^2, Phase change material can keep the state of two phase , which can keep a stable output power. The above analysis indicates that the concentrator area can notably influence the dynamic characteristic of system and the phase change materials should be kept in the state of two phase by choose the proper area of concentrator in order to keep the stable output power.

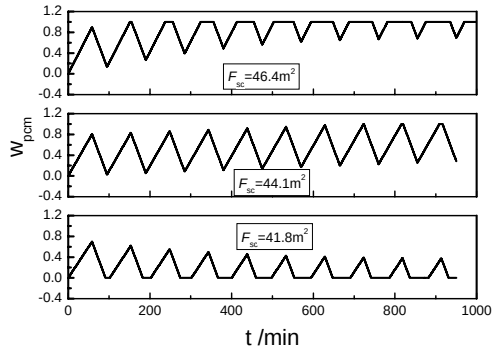

Fig. 5 Effect of concentrator area on the liquid fraction of phase change material

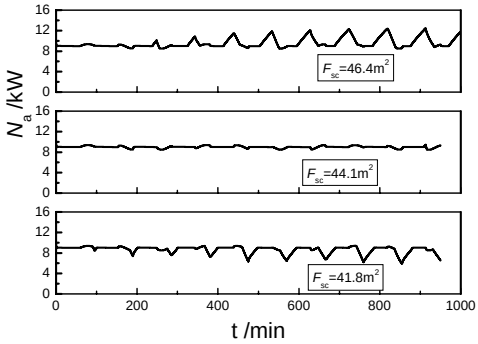

Fig. 6 Effect of concentrator area on the s

5. CONCLUSION

（1） In order to study the dynamic characteristic of the system, a dynamic model is proposed using lumped method and the dynamic simulations of space solar-dynamic power system with the electrical output power of 10 kW are performed.

（2） The temperature of phase change materials is the main influencing factor of system dynamic characteristic. If phase change material can be kept in the state of two phases, the temperature of phase change material and system output power can keep stable. Once phase change materials change in to single phase state, the temperature of phase change materials may increase or decrease, which lead to the up or down fluctuation of output power.

（3） The concentrator area can notably influence the dynamic characteristic of system and the phase change materials should be kept in the state of two phase by choose the proper area of concentrator in order to keep the stable output power.

REFERENCES

[1] Hans Müller-Steinhagen and Franz Trieb. 2002. High temperature solar energy - The key to sustainable energy provision. Proceeding of the 12th International heat transfer coference. Grenoble.

[2] Tian Wenhua. 1992. Space technology intelligence (in Chinese), pp. 26~43.

[3] Anthony P. 1989. Advanced solar brayton space power system. Proc. Of 24th Intersociety Energy Conversion Engineering Conference. 6-11 Aug. Washington,DC.

[4] Klann L J. 1994. Steady-state analysis of a brayton space power system{R}. NASA TN D-5673.

[5] Mock E A. 1977. Closed cycle gas turbine optimization-procedures and examples. Air research Report, pp. 31-2635

[6] Hanlon J C. *Proceedings of the Intersociety Energy Conversion Engineering Conference*，1992，1：1.51～1.55

[7] Dong Keyong. 1998. Thermal analysis of high temperature solid-liquid phase change thermal energy storage container. PhD. Thesis. Beijing: Beijing University of aeronautics and astronautics

[8] Wu Yuting, Ren Jianxun, Guo Zengyuan & Liang Xingang. 2003. Optimal analysis of a space solar dynamic power system. Solar energy, vol. 74, pp.205~215.

[9] Wu Yuting，Ren Jianxun，Guo Zengyuan，Liang Xingang. 2002. Study of mass minimization of space solar Dynamic power system Journal of Engineering Thermophysics，，vol. 23（suppl.）, pp.149－152